ILLUMINATOR DATA

LTPVZE240X240D50-X-G-24V

Lighting Dimension

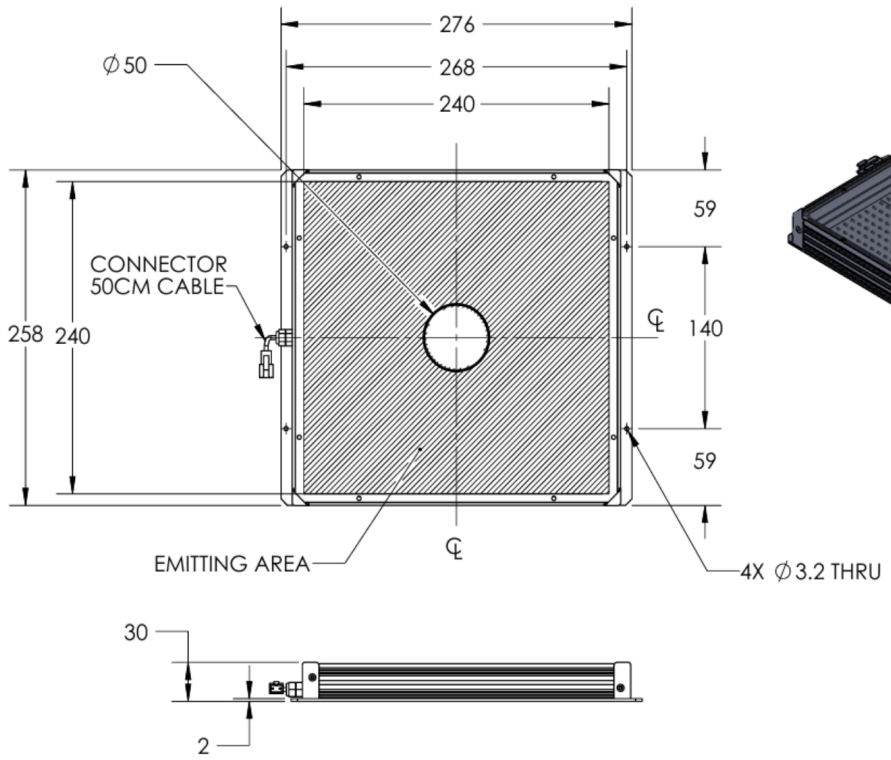

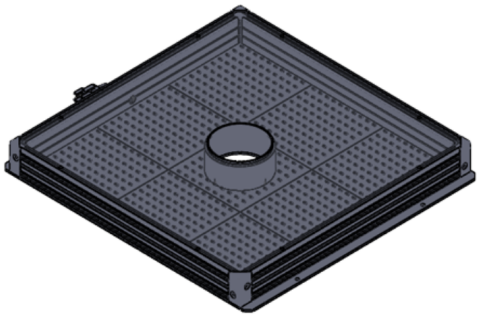

Mechanical Information	
Casing Material	Aluminium
Storage Temperature Range	0 - 45°C
Storage Humidity Range	20 - 85%
Weight	-g
Width / Inner Diameter	258mm
Length / Outer Diameter	276mm
Height / Thickness	30mm

ILLUMINATOR DATA

LTPVZE240X240D50-X-G-24V

Lighting Information			
LED Color	GREEN		
Wavelength	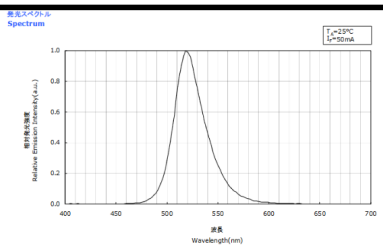 510 nm - 540 nm		
Working Distance	70mm	85mm	100mm
Intensity (±15%)	17861lx	15659lx	14270lx
Illumination (Number of Row)	0		
Illumination Active Area	Active Outer Diameter	240	
	Active Inner Diameter	240	
Emission Angle	0°		
Eye Safety Class (IEC62471)	EXEMPT Products with sources, which do not pose any potential photobiological hazard even for the continuous and unrestricted exposure. Example: 8 hours of exposure poses no acute hazard to either eye or skin, and 10,000 seconds (2.8 hours) of the intent starting causes no blue light retinal hazard.		
Chromaticity Table For White Colour Only	Color Ranks Rank b3: x 0.2820 0.2830 0.3040 0.3070; y 0.2950 0.3050 0.3300 0.3150 Rank b4: x 0.3070 0.3040 0.3300 0.3300; y 0.3150 0.3300 0.3600 0.3390 Rank b5: x 0.2960 0.2870 0.3070 0.3110; y 0.2760 0.2950 0.3150 0.2940 Rank b6: x 0.3110 0.3070 0.3300 0.3300; y 0.2940 0.3150 0.3390 0.3180 Rank c1: x 0.3300 0.3300 0.3610 0.3570; y 0.3390 0.3600 0.3850 0.3610 Rank c2: x 0.3300 0.3390 0.3570 0.3560; y 0.3180 0.3390 0.3610 0.3510 Rank sw50: x 0.3366 0.3376 0.3548 0.3515; y 0.3369 0.3616 0.3736 0.3487 Rank sw57: x 0.3221 0.3207 0.3376 0.3366; y 0.3261 0.3462 0.3616 0.3369 Rank sw65: x 0.3070 0.3040 0.3207 0.3221; y 0.3113 0.3300 0.3462 0.3261 * Ranking at T_j=25°C. * Tolerance of measurements of the Forward Voltage is ±0.05V. * Tolerance of measurements of the Luminous Flux is ±7%. * Tolerance of measurements of the Color Rendering R_a is ±2. * Tolerance of measurements of the Chromaticity Coordinate is ±0.005. * A shipment shall consist of LEDs in a combination of the above ranks. The percentage of each rank in the shipment shall be determined by Nichia.		

Electrical Information	
Rated Voltage	$24V_{(Min)}$ - $24V_{(Max)}$
Rated Current	1530mA
Power Consumption	36.720W
Casing Temperature, After 60 minutes operation	60°C

Strobe Mode Specification		
*Normal Strobe Voltage	24V	
*Normal Strobe Current	1530mA	
Overdrive Voltage Range	Min: 36V	Max: 48V
Overdrive Current Range	Min: 4590mA	Max: 7650mA
Recommended Overdrive Voltage	36V	
**Max. Trigger Pulse Duration	10%	
**Max. Duty Cycle	10msec	

*Normal strobe means the lighting is operated using the rated power. Overdrive means the power supplied to the lighting exceeded the rated power.

**Overdrive condition must not exceed the max. trigger pulse duration and max. duty cycle.

ILLUMINATOR DATA

LTPVZE240X240D50-X-G-24V

Connection Information			
Connector Type	JST SMR-03V-B		
Cable Length	500mm		
Pin Configuration	**Pin**	**Signal**	**Cable Color**
	1	24V	RED
	2	-	-
	3	GND	WHITE / BLACK
	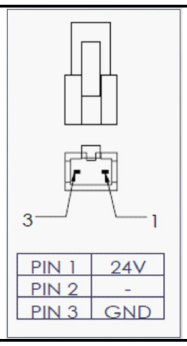		

Additional Information	
Additional Cooling Method	Attached to machine part for better heat dissipation
Intensity Controller Selection	LTIC series
CE Conformity	YES
RoHS Compliance	YES

Application	
Illumination Type	High Intensity Diffused Front Light
Application Use	• Robotic Picking • Identification of Missing Part • Dimensions Measurements • Shape Recognition 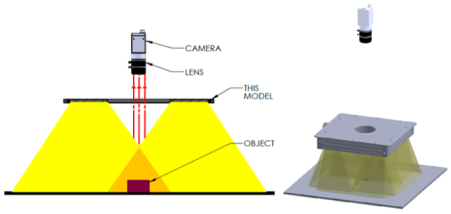

ILLUMINATOR DATA

LTPVZE240X240D50-X-G-24V

Lighting Pattern				
Working Distance	For further details, please contact us			
Display and Image	For further details, please contact us			
Data Results	Horizontal	Meas. (mm)	Vertical	Meas. (mm)
	90%	N.A.	90%	N.A.
	90%	N.A.	90%	N.A.
	80%	N.A.	80%	N.A.
	70%	N.A.	70%	N.A.
	60%	N.A.	60%	N.A.
	50%	N.A.	50%	N.A.
	40%	N.A.	40%	N.A.
	30%	N.A.	30%	N.A.
	20%	N.A.	20%	N.A.
	10%	N.A.	10%	N.A.